EnduraLED MR16 Bullyte (BL5016) Specification Sheet

Project Name:	Location:	MFG: Philips Hadco
Fixture Type:	Catalog No.:	Qty:

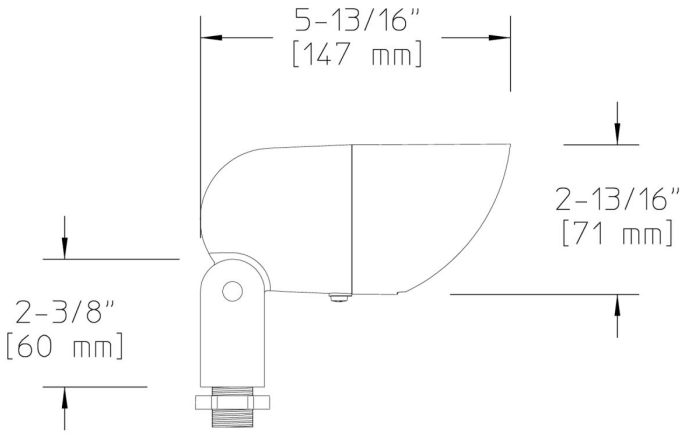

Ordering Guide

Example: BL5016 A S7 LED7 C

Product Code	BL5016	EnduraLED MR16 Bullyte	
Finish	A G H	Black Verde Bronze	
Mounting	S7	Mounting Stake	
LED	LED7	7W MR16	*1
CCT	C W	Cool 4000K Warm 2700K	

*1 Lamp comes installed as integral part of fixture and can not be ordered separate.

Specifications

HOUSING:
Die-cast marine grade aluminum alloy. Fully-adjustable swivel arm with vibration-proof locking teeth. Fully rotatable shroud, double gasketed, die-cast marine grade alloy aluminum. ½" NPS male threads to screw onto accessory mounting stake or junction box, sold separately. Gasketing is silicone. Fasteners are 300 series stainless steel.

FINISH:
Thermoset polyester powdercoat is electrostatically applied after a five-stage conversion cleaning process and bonded by heat fusion thermosetting.

LAMPING:
7w - 35w consumption features active cooling technology to disperse heat. White high brightness (HB) LEDs. Delivers 70% lumen maintenance at 20,000 hours. Cool white (4,000K nominal). Warm white (2,700K nominal). Instant-on light. Emits virtually no UV/IR light beam. 20,000+ hours rated life. No UV and Cool Beam (no IR).

OPTICAL ASSEMBLY:
Clear tempered glass affixed at 10° angle for natural cleaning. 24° beam angle for a clearly defined beam spread.

ELECTRICAL ASSEMBLY:
Bi-pin socket type (GU5.3) with 250° C high temperature teflon coated wire leads. Stainless steel retention clip affixed to socket to securely hold lamp in place. 12 Volt fixture is pre-wired with 3-ft pigtail of 18-2 AWG, 105° C, SPT-1W wire. Low voltage quick connector, catalog #LVC3 included for easy hook-up to the low voltage supply cable, not included. 12 Volt system requires remote transformer, not included.

WARRANTY:
Five-year limited warranty.

CERTIFICATIONS:
ETL Listed to U.S. safety standards for wet locations. cETL listed to Canadian safety standards for wet locations. Manufactured to ISO 9001:2008 Standards.

Width:
2 13/16" (71mm)

Length:
5 13/16" (147 mm)

Max. Weight:
1.48 lb

Note: Philips reserves the right to modify the above details to reflect changes in the cost of materials and/or production and/or design without prior notice.
100 Craftway Drive, Littlestown, PA 17340 | P: +1-717-359-7131 F: +1-717-359-9289 | http://www.hadco.com | Copyright 2011 Philips
HW1