Date: _____ Type: _____

Firm Name: _____

Project: _____

eW Fuse Powercore

4000 K, 10° x 60° Beam Angle

Ultra-compact, high-performance LED grazing fixture

With narrow and medium beams of intense white, eW Fuse Powercore is an excellent choice for a full range of surface grazing and wall-washing applications. Its ultra-compact form factor permits installation in tight spaces too small to accommodate conventional grazing fixtures with similar light output. Meets or exceeds the performance of comparable linear fluorescent grazing fixtures while lowering installation, energy, and maintenance costs. Offers environmentally-conscious buyers a green, energy-efficient grazing fixture with industry-leading quality and quantity of light.

- Cost-effective alternative — Long useful source life and low-maintenance operation represent a cost-effective alternative to traditional grazing fixtures.
- High-performance beam quality — Available narrow 10° x 60° or medium 30° x 60° beam angle. Superior beam quality delivers striation-free light as close as 6 in (152 mm) from fixture placement. Interlocking connectors for end-to-end installation with no light scalloping between fixtures.
- Multiple color temperatures for design and application flexibility — Available in 2700 K, 3000 K, 3500 K, and 4000 K for applications calling for warm, neutral, or cool white light.
- Optibin advanced binning algorithm — Exceeds the recognized standards for color quality to guarantee uniformity and consistency of hue and color temperature across LED sources, fixtures, and manufacturing runs.
- Integrates patented Powercore technology — Powercore rapidly, efficiently, and accurately controls power directly from line voltage, eliminating the need for an external power supply, dramatically simplifying installation, and lowering total system cost.
- Support for multiple voltages — Accepts power input of 100, 120, 208, 220 – 240, and 277 VAC for consistent installation and operation from line voltage in most locations.
- Dimming capability — Patented DIMand technology offers smooth dimming capability with selected commercially available reverse-phase ELV-type dimmers.
- Simple installation — Contractor-friendly installation with product runs ranging from 50 fixtures at 100 VAC to 139 fixtures at 277 VAC. Easy-to-install 4 ft (1.2 m) mounting tracks for quick setup in linear applications.

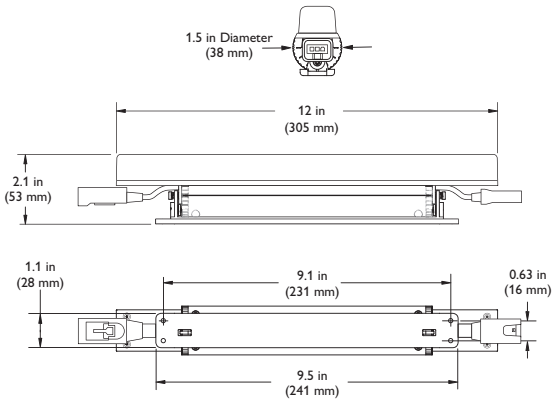

- Easy mounting and positioning — With end-to-end locking power connectors that can make 180° turns, eW Fuse Powercore fixtures are easy to position in even the most challenging mounting circumstances. Fixtures rotate in 10° increments through 180° for precise aiming and color mixing. Optional mounting tracks support vertical and overhead positioning. 1 ft (305 mm) and 5 ft (1.5 m) jumper cables can add extra space between fixtures.

For detailed product information, please refer to the eW Fuse Powercore Product Guide at www.colorkinetics.com/ls/essentialwhite/ewfusepc

PHILIPS

Specifications

Due to continuous improvements and innovations, specifications may change without notice.

Item	Specification	4000 K*, 10° x 60° beam angle
Output	Lumens†	657
	Efficacy (lm / W)	55.2
	CRI	82
	Lumen Maintenance‡	50,000 hours L_{70} @ 25° C 37,000 hours L_{70} @ 50° C 90,000 hours L_{50} @ 25° C 80,000 hours L_{50} @ 50° C
Electrical	Input Voltage	100 / 120 / 208 / 220 – 240 / 277 VAC, auto-switching, 50 / 60 Hz
	Power Consumption	12.5 W maximum at full output, steady state
	Power Factor	.99 @ 120 V
Control	Dimming	Compatible with many commercially available ELV, trailing edge, or reverse-phase control dimmers§
Physical	Dimensions *(Height x Width x Depth)*	1.1 x 12 x 2.1 in (28 x 305 x 53 mm)
	Weight	0.98 lbs (.45 kg)
	Housing	Die-cast aluminium, white powder-coated finish
	Lens	Polycarbonate
	Fixture Connections	Integral male / female connectors
	Temperature Ranges	-40° – 122° F (-40° – 50° C) Operating -4° – 122° F (-20° – 50° C) Startup -40° – 176° F (-40° – 80° C) Storage
	Humidity	0 – 95%, non-condensing
	Maximum Fixture Run Length‖	50 @ 100 VAC 60 @ 120 VAC 104 @ 208 VAC 115 @ 220 – 240 VAC 139 @ 277 VAC *Configuration: Fixtures installed end-to-end, 20 A circuit, standard 10 ft (3 m) Leader Cable*
Certification and Safety	Certification	UL / cUL, FCC, CE, C-Tick
	Environment	Dry / Damp Location, IP20

* Color temperatures conform to nominal CCTs as defined in ANSI Chromaticity Standard C78.377A.

† Lumen measurement complies with IES LM-79-08 testing procedures.

‡ L_{70} = 70% lumen maintenance (when light output drops below 70% of initial output). L_{50} = 50% lumen maintenance (when light output drops below 50% of initial output). Ambient luminaire temperatures specified. Lumen maintenance calculations are based on lifetime prediction graphs supplied by LED source manufacturers. Calculations for white-light LED fixtures are based on measurements that comply with IES LM-80-08 testing procedures. Refer to www.philipscolorkinetics.com/support/appnotes/lm-80-08.pdf for more information.

§ Refer to www.colorkinetics.com/support/appnotes/ for specific details.

‖ These figures are accurate for this configuration only. Changing the configuration can affect fixture run lengths.

Photometrics

4000 K, 10° x 60° beam angle

Polar Candela Distribution

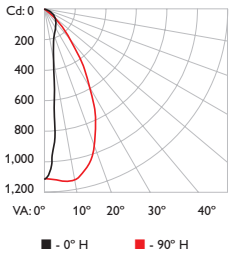

	0.0	22.5	45.0	67.5	90.0
0	1197	1197	1197	1197	1197
5	808	857	996	1156	1228
15	233	245	315	671	1167
25	175	171	182	304	854
35	130	125	122	159	441
45	123	103	80	63	108
55	70	62	44	31	41
65	42	34	23	18	23
75	25	21	14	10	9
85	15	13	9	5	3
90	12	11	7	4	1

Illuminance at Distance

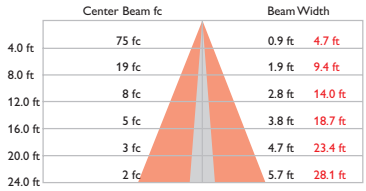

34.6 ft (10.5 m)
1 fc maximum distance

Vert. Spread: 13.4°
Horiz. Spread: 60.6°

For lux multiply fc by 10.7

Lumens	657
Efficacy	55.2 lm / W

OPTIBIN® CK TECHNOLOGY | POWERCORE® CK TECHNOLOGY | DIMAND™ CK TECHNOLOGY

Accessories

Item	Type		Item Number	Philips 12NC
Leader Cable with terminator and strain relief	UL / cUL	10 ft (3 m)	108-000047-00	910503700972
	CE / CCC	10 ft (3 m)	108-000047-01	910503700973
Wiring Compartment with terminator	UL / cUL		120-000077-01	910503700994
Jumper Cable	UL / cUL	1 ft (305 mm)	108-000048-00	910503700974
		5 ft (1.5 m)	108-000048-01	910503700975
	CE / CCC	1 ft (305 mm)	108-000048-02	910503700976
		5 ft (1.5 m)	108-000048-03	910503700977
Terminators	10 / box		120-000099-00	910503701120
Mounting Track, White	Quantity 1	4 ft (1219 mm)	120-000124-00	910503701787

Fixtures

Color Temp.	Beam Angle	Item Number	Philips 12NC
2700 K	10° x 60°	523-000065-08	910503701717
	30° x 60°	523-000065-12	910503701721
3000 K	10° x 60°	523-000065-09	910503701718
	30° x 60°	523-000065-13	910503701722
3500 K	10° x 60°	523-000065-10	910503701719
	30° x 60°	523-000065-14	910503701723
4000 K	10° x 60°	523-000065-11	910503701720
	30° x 60°	523-000065-15	910503701724

Use Item Number when ordering in North America.

Philips Color Kinetics
3 Burlington Woods Drive
Burlington, Massachusetts 01803 USA
Tel 888.385.5742
Tel 617.423.9999
Fax 617.423.9998
www.philipscolorkinetics.com

Copyright © 2011 Philips Solid-State Lighting Solutions, Inc. All rights reserved.
Chromacore, Chromasic, CK, the CK logo, Color Kinetics, the Color Kinetics logo, ColorBlast, ColorBlaze, ColorBurst, ColorGraze, ColorPlay, ColorReach, iW Reach, eW Reach, eW Fuse, DIMand, EssentialWhite, eW, iColor, iColor Cove, IntelliWhite, iW, iPlayer, Optibin, and Powercore are either registered trademarks or trademarks of Philips Solid-State Lighting Solutions, Inc. in the United States and / or other countries. All other brand or product names are trademarks or registered trademarks of their respective owners. Due to continuous improvements and innovations, specifications may change without notice.

DAS-000079-07 R02 09-11