coloronix®
COLORFUL ARCHITECTURAL ILLUMINATION

SW51

RGBW PATHWAY LIGHT

CATALOG #:

TYPE:

PROJECT:

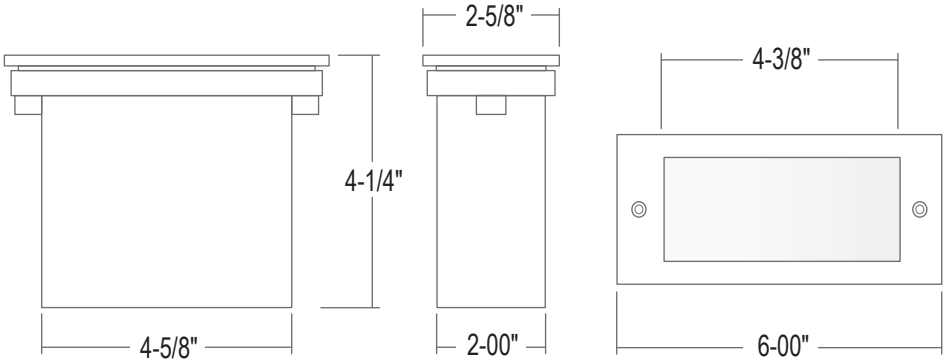

Ceiling Opening: 4-3/4" x 2-1/8"

APPLICATION:

For the use of Low Level illumination of pathways, ramps, steps, corridors and other environments. To Install as Recessed in Ceilings. Perfect for applications desiring a dynamic color chaning effect. Recommended for retail, modern residential, hospitality and entertainment installations. RGBW design allows fine-tuned pastel colors and saturated hues without sacrificing illumination brightness. Belongs to C35 series family.

ELECTRICAL:

Power Input: Direct 12V/24V DC 0.15A Max

Power Input Connection:
Hardwire via provided power cable

Power Consumption: 0.1-5W

PHYSICAL:

Environment: Wet Locations Indoor/Outdoor

Construction: High grade die cast aluminum with a powder coat finish

Finish: Painted white to maximize color mixing and eliminate stray light leaks

L70 Life: 35,000 Hours

Temperature Rating: 35°F - 120°F Ambient

COLOR DETAILS:

DirectDMX Color Control:
Color controlled with USITT DMX512A Standard Protocol. On board Dip Switches inside the Data Enabler allow selecting of DMX addresses between 1-220 in a given DMX universe w/ DirectDMX. Data fed to housing via standard RJ45 input/output.

Stand Alone Color Control:
Pre-Programmed static and dynamic scenes, as well as specific colors, can be user activated by the integral Data Enabler's computer eliminating the need for an external data source. On board Dip Switches inside the Data Enabler allow selecting of over 30 static and dynamic color sequences.

LED Die Colors: Red (620-635nm)
Green (520-535nm)
Blue (450-465nm)
Neutral White (4000k)

Color Mixing: InternaMix Unified Color Mixing

Static Colors Available: All Std. Colors, Consult Factory

SAFETY: UL 8750 and UL 1598

COMPATIBILITY:

DMX COLOR CONTROL:

Color Kinetics iColorPlay
ColorWheel-Static
ColorWheel-Fade
Miniature USB Controller
ColorPad Touch

STAND ALONE COLOR CONTROL:

Wall Mounted Wireless Signal Reciever

Wireless Remote Control

POWER SUPPLY:

Power Supply:
100W Low Voltage Power Supply

© 2010 COLORONIX • WWW.RGBW.COM • Ph. 323.677.4242 • A DIVISION OF EEMA LIGHTING GROUP • ALL RIGHTS RESERVED • PRODUCT SPECIFICATIONS SUBJECT TO CHANGE WITHOUT NOTICE